Installation Instructions

BMW B38/B48 Engines

WARNING

This product has been designed and manufactured to work correctly with installation as described in these instructions.

Failure to follow these instructions could result in damage to property, damage to the product and or potential injury.

It is very important that you read and understand these instructions thoroughly before installing this product.

Included Contents:

- Tuning Module
- Wiring Loom
- Fastening Ties
- Installation and User instructions
- Protective Bag For Module – (prevents damage to unit casing)

Before installation:

1. Open the vehicle's bonnet
2. Remove the ignition key
3. Close and lock the doors
4. Wait 5 minutes before removing any electrical plugs

WARNING

Do not open the vehicle doors or unlock the vehicle while installation is in progress.

Installation Location:

The module should be installed between the vehicle's MAP and Boost sensors as shown in the diagram.

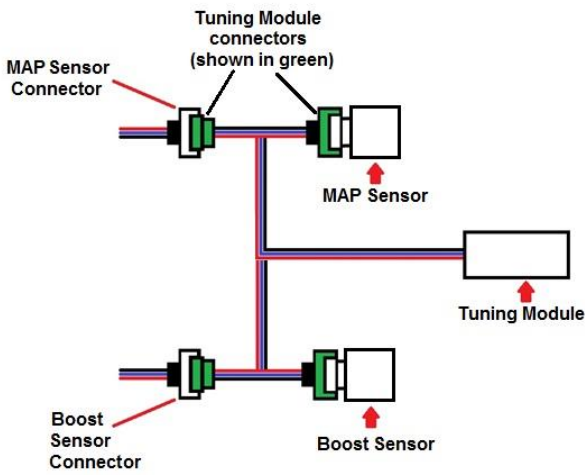

Locating the Unit:

The unit itself should be mounted away from:

Sources of Extreme Heat

Sources of Vibration

Sources of Spray Water

(H3b#-H4m-B38/48-Pet18)

Copyright 2015

Installation Instructions

BMW B38/B48 Engines

Introduction

- Ensure that your engine looks similar to the supplied photographs. (minor changes with ancillary components are to be expected, however if the engine looks nothing alike, please contact Support.)

- Remove the plastic engine cover. This usually pulls off with a firm tug. On certain models the cover is secured with bolts. If this is the case, remove the bolts and lift off the engine cover.

Copyright 2015

Installation Instructions

BMW B38/B48 Engines

Step 1

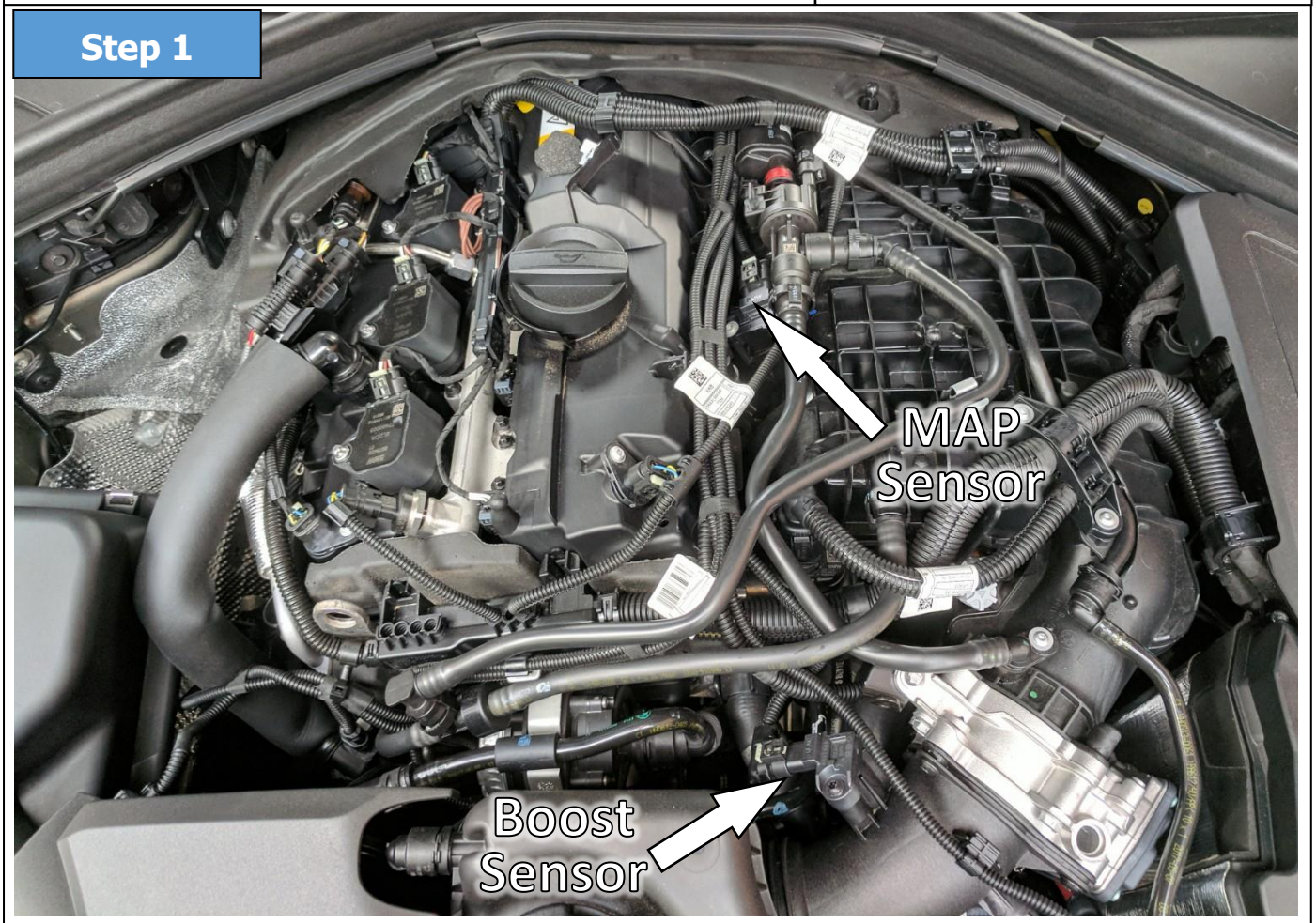

- Ensure that your engine looks similar to the supplied photographs (minor changes with ancillary components are to be expected, however if the engine looks nothing alike, please contact Support.)

- Familiarise yourself with the locations of the connectors highlighted.

- Make sure that you have a good grasp of the operation of the connector clips and or locking tabs. - If the connectors you are trying to access are in an awkward place, it may be useful to try unplugging (and then re-inserting) a connector on the vehicle which is more easily accessible. Alternatively try plugging together the connectors on the Tuning Module itself.

Copyright 2015

Installation Instructions

BMW B38/B48 Engines

Step 2

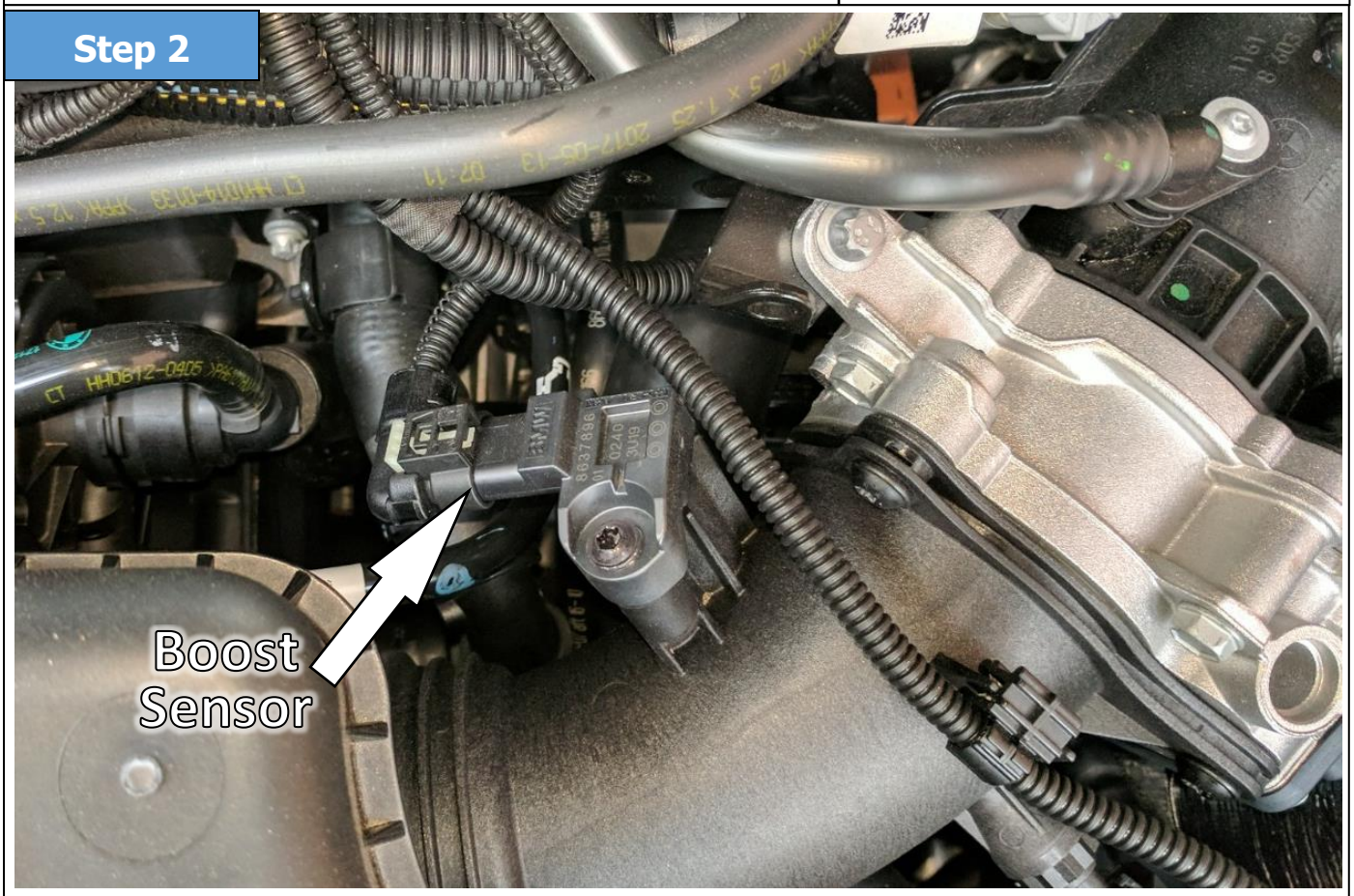

- Unplug the Boost Sensor connector (3 pin) by first pulling back the grey tab, then pressing down on it and pulling back on the connector.

- Insert the connector from the Tuning Module's wiring loom into the Boost Sensor.

- Insert the Vehicle's Boost Sensor connector into the corresponding connector on the Tuning Module's wiring loom.

Copyright 2015

Installation Instructions

BMW B38/B48 Engines

Step 3

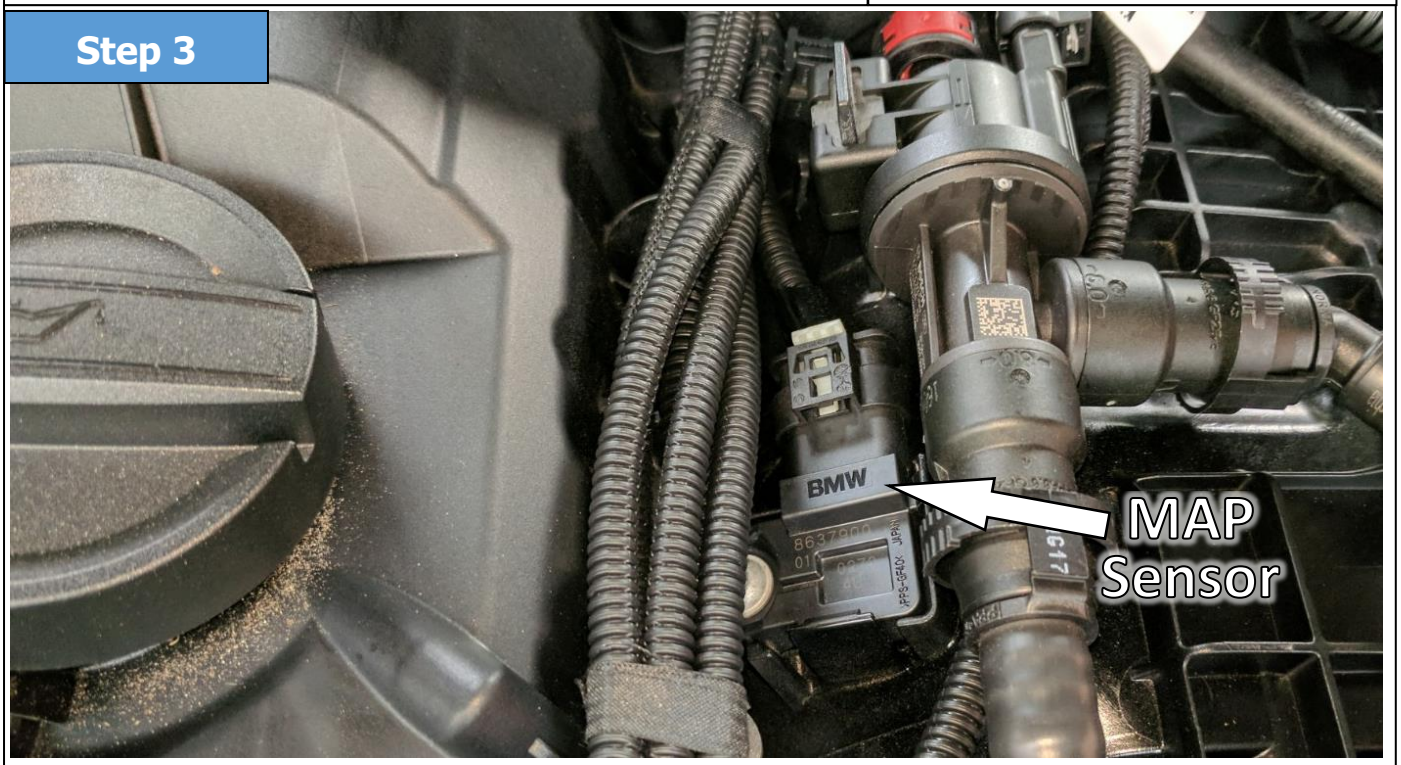

- Unplug the MAP Sensor connector (4 pin) by first pulling back the grey tab, then pressing down on it and pulling back on the connector.

- Insert the connector from the Tuning Module's wiring loom into the MAP Sensor.

- Insert the Vehicle's MAP Sensor connector into the corresponding connector on the Tuning Module's wiring loom.

Copyright 2015

Installation Instructions

BMW B38/B48 Engines

Finish

- With the unit successfully installed please secure the unit and wiring loom within the engine bay, paying attention to the guidelines highlighted on Page 1.

Route the tuning box wiring harness away from sources of heat (exhaust manifolds, EGR pipes, most stainless steel pipes) and also away from any rotating parts such as belts.

- Double check all connections are correct and firmly connected. If this is the case, start the vehicle and ensure there are no engine warning lights or error messages displayed.

If everything is as it should be, please feel free to take the vehicle out for a test drive and enjoy the added responsiveness and power added to your vehicle by the Tuning Module.

Copyright 2015